SHOP USE ONLY	
CUT	
FIT	
WLD	
PNT	
QC	

MATERIALS (ASTM)
W-SHAPES: A992
PLATE/BAR: A36
ANGLES: A36
CHANNELS: A36
PIPE: A53, Gr. B
HSS: A500, Gr. B
BOLTS: A325N, UNO
WELDING: AWS E70XX

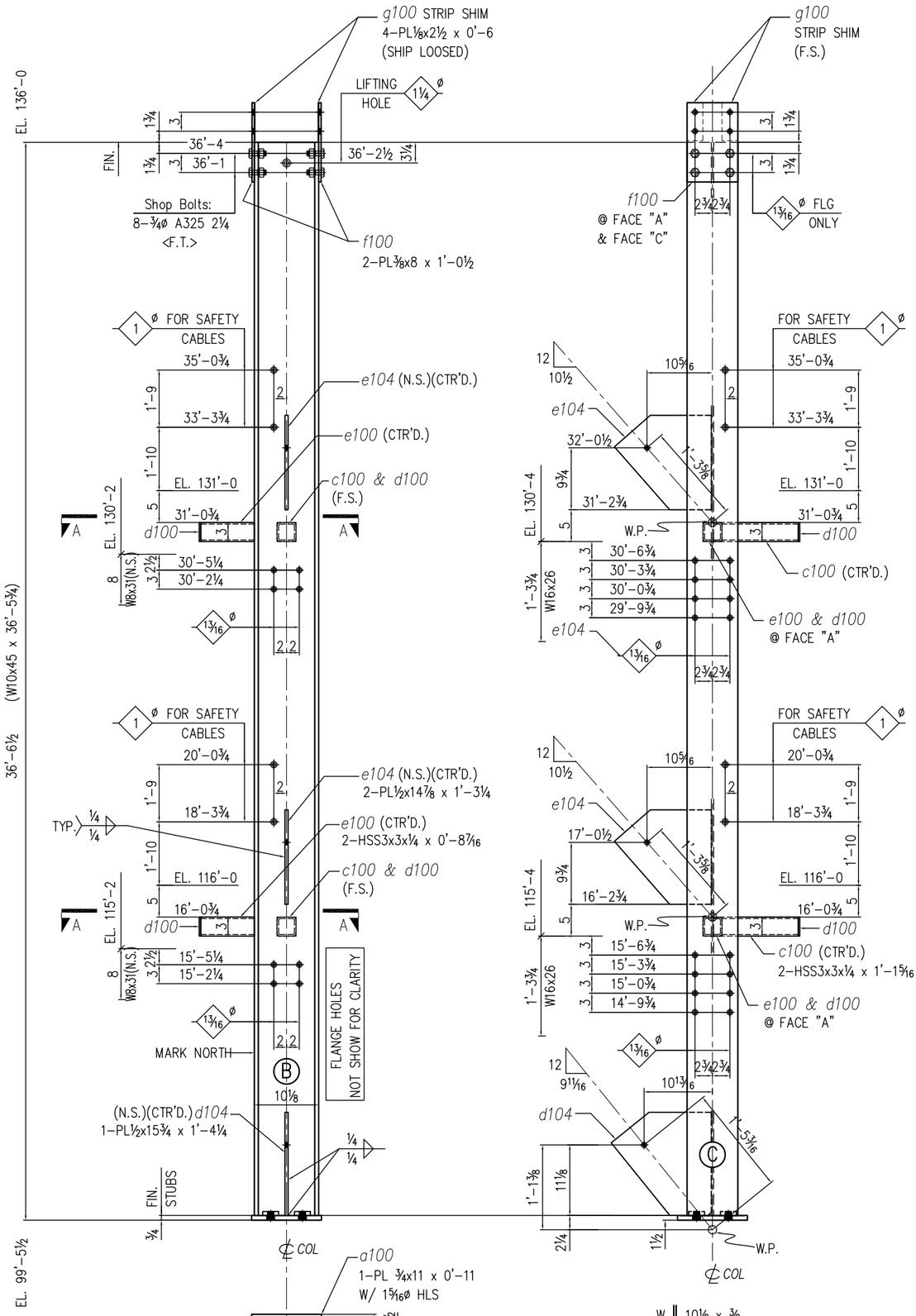

W	10⅛ x ⅜
F	8 x ⅝

ONE ~ COLUMN ~ 103C1
REF: B/7

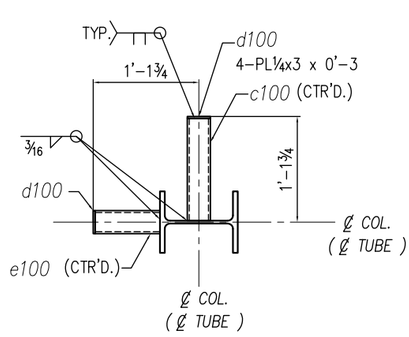

SECTION A-A

STRUCTURE	
LOCATION	
CUSTOMER	
DRAWN HK	SHOP ORDER
CHECKER –	SHEET NO. 103
REV 0	

QTY	DESCRIPTION	LENGTH FT	LENGTH IN	MARK	REMARKS	WEIGHT
ONE	COLUMN			103C1	–	
ONE	W10x45	36	5¾		F2E	1641.6
1	PL ¾x11	0	11	a100		25.7
2	HSS3x3x¼	1	1⁵⁄₁₆	c100		20.8
4	PL¼x3	0	3	d100		2.6
2	HSS3x3x¼	0	8⁷⁄₁₆	e100		13.2
2	PL⅜x8	1	0½	f100		21.3
4	PL⅛x2½	0	6	g100	(SHIP LOOSED)	2.1
1	PL½x15¾	1	4¼	d104		36.3
2	PL½x14⅞	1	3¼	e104		64.4
8	¾ø A325	0	2¼	–	(SHOP BOLTS)	–
	TOTAL WEIGHT					1832.40

ISSUE / REV	BY	DATE	DESCRIPTION
	HK	7/3/24	FOR APPROVAL
	HK	8/22/24	FOR FABRICATION
	–	–	–

PAINT: STD. GREY PRIMER
MILL THCK:
CLEAN: SP2
AESS: NO
NOMMA: NA
OTHER:
REF: –