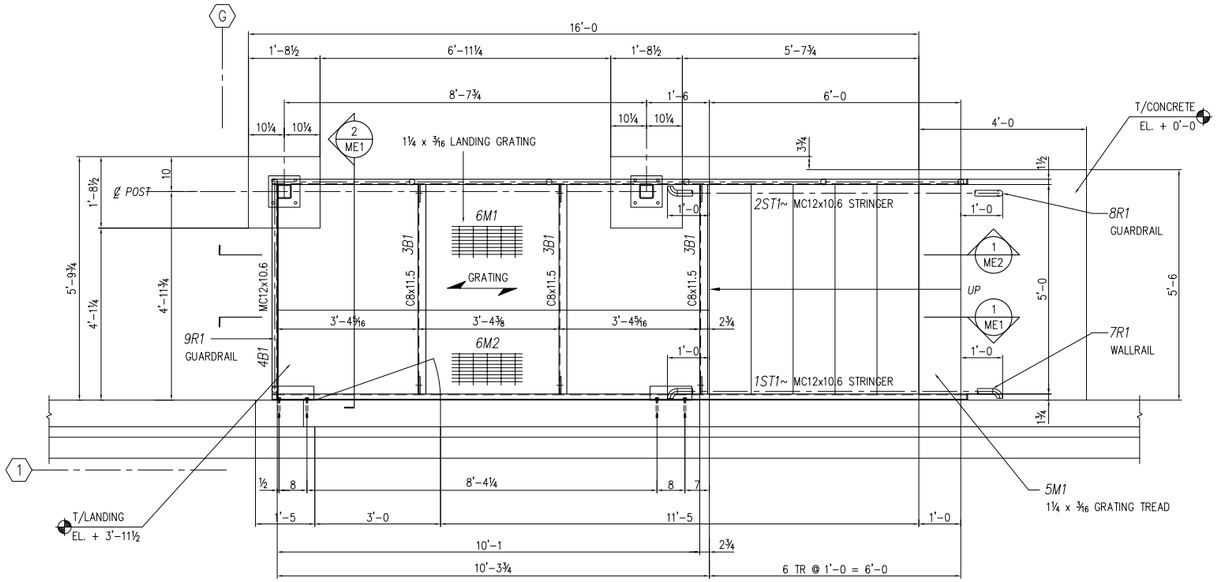

STAIR ERECTION PLAN

PLAN

1/2"=1'-0 REF. A/S1602

(ALL STEEL ARE GALVANIZED U.N.O.)

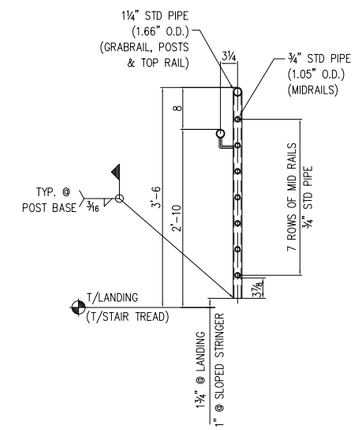

TYP. GUARDRAIL SECTION

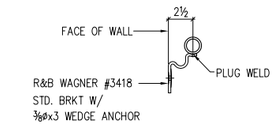

TYP. WALL RAIL BRACKET

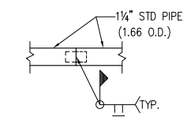

TYPICAL SPLICE @ PIPE RAIL END

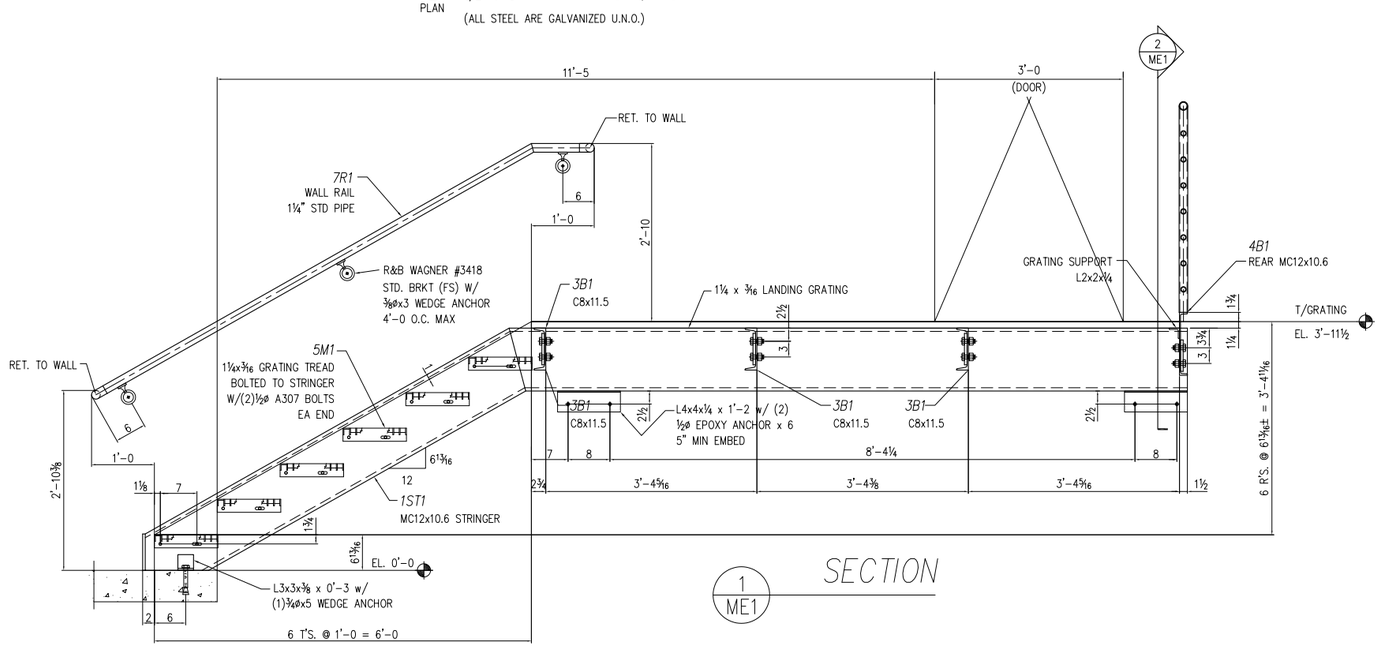

SECTION

1 / ME1

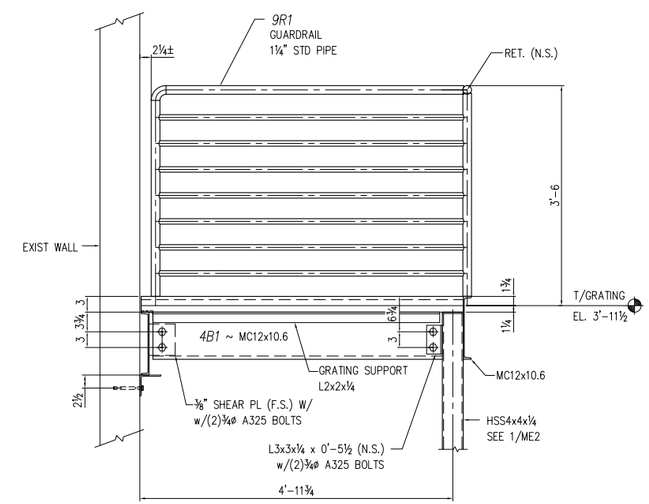

SECTION

2 / ME1

MATERIALS (ASTM)

W-SHAPES: A992
PLATE/BAR: A36
ANGLES: A36
CHANNELS: A36
PIPE: A53, Gr. B
HSS: A500, Gr. B
BOLTS: A325N, UNO
WELDING: AWS E70XX

ISSUE / REV	BY	DATE	DESCRIPTION
	HK	8/18/21	FOR FIELD USE
	–	–	–
	–	–	–
	–	–	–
	–	–	–

PAINT: STD. GREY PRIMER
MILL THCK:
CLEAN: SP2
AESS: NO
NOMMA: NA
OTHER:
REF: –

STRUCTURE
LOCATION
CUSTOMER
DRAWN HK
CHECKER –
SHOP ORDER
SHEET NO. ME1
REV A